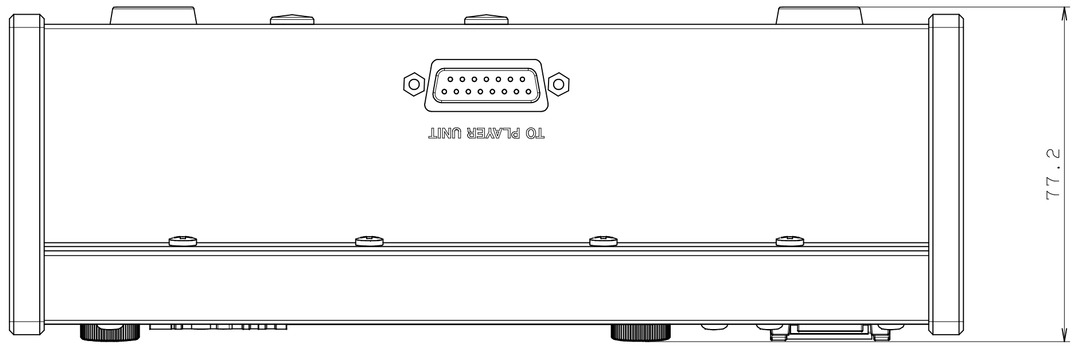

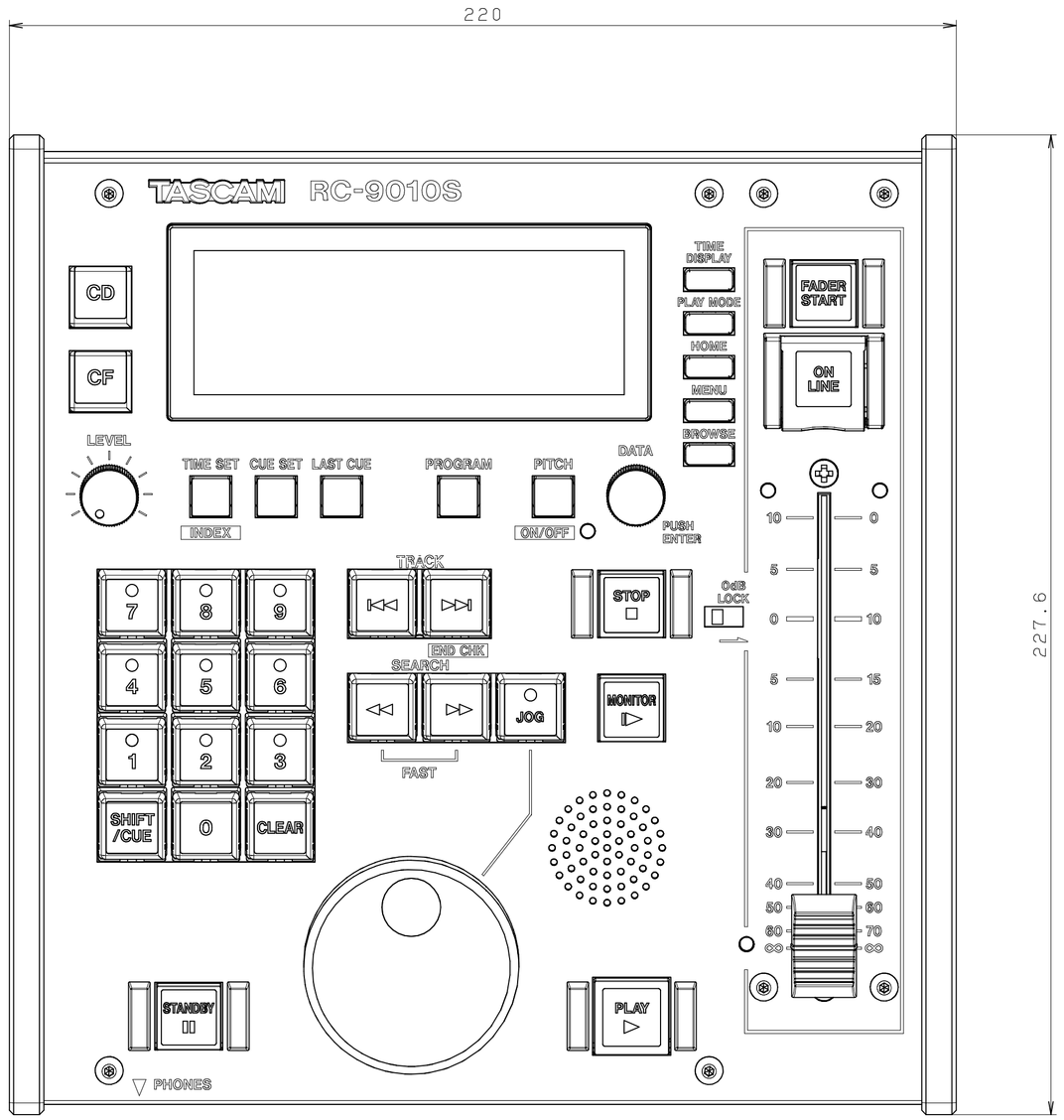

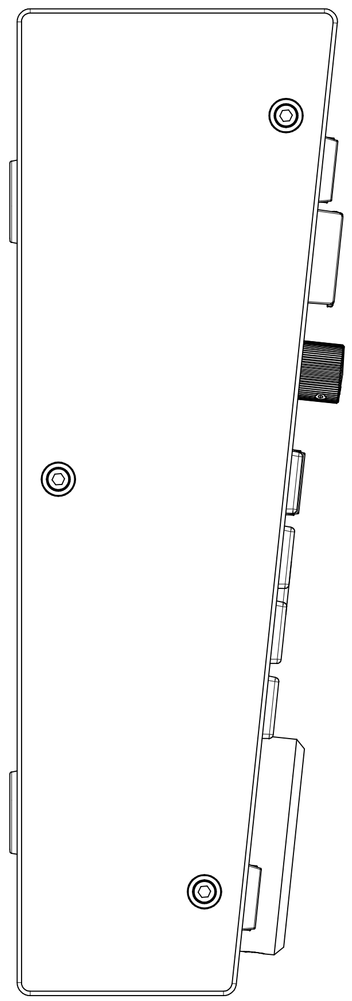

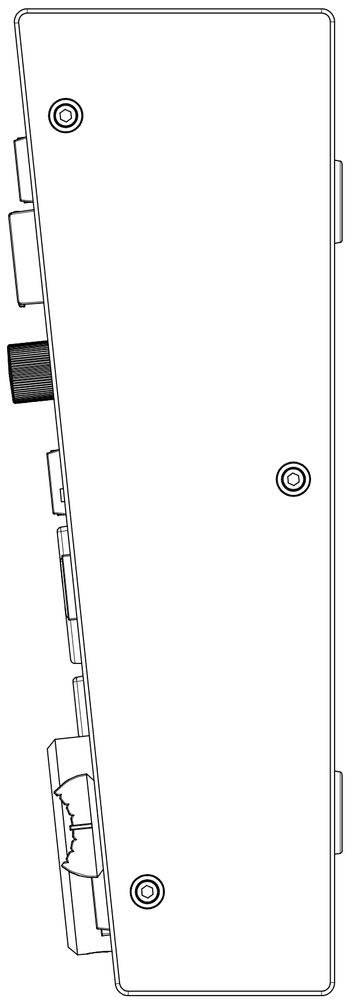

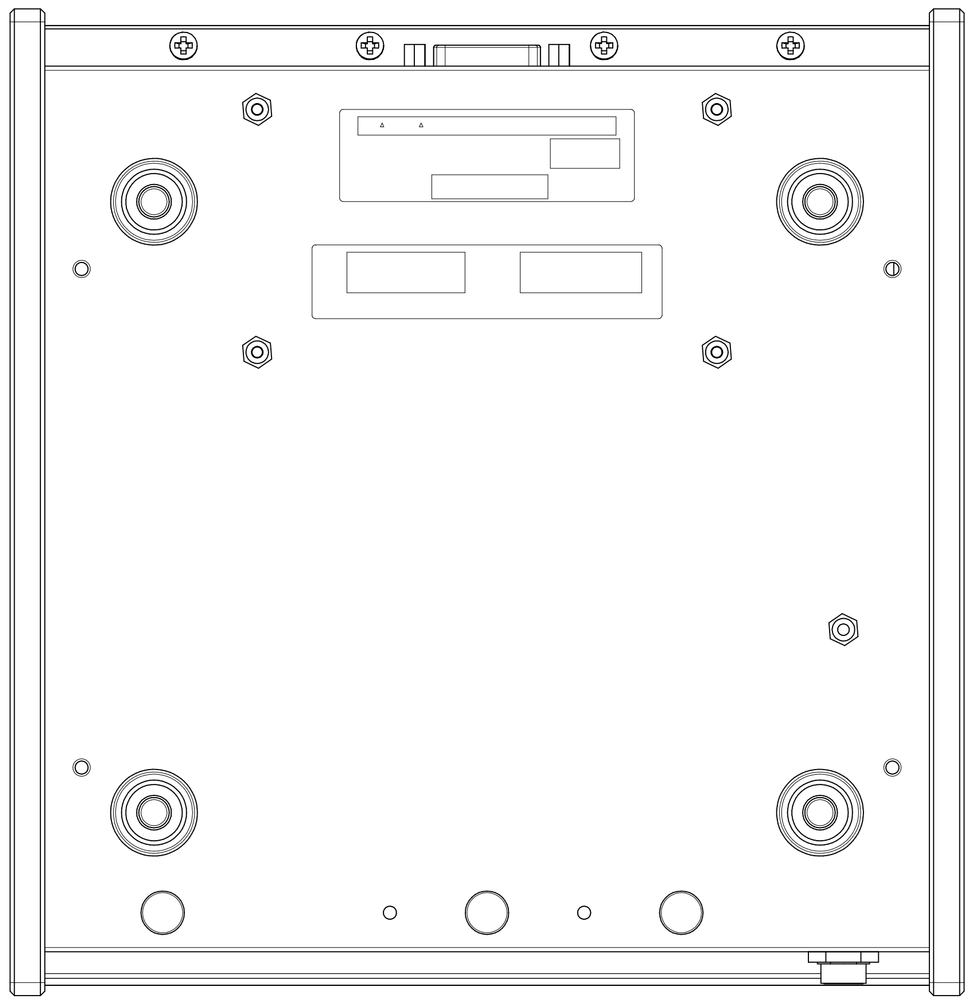

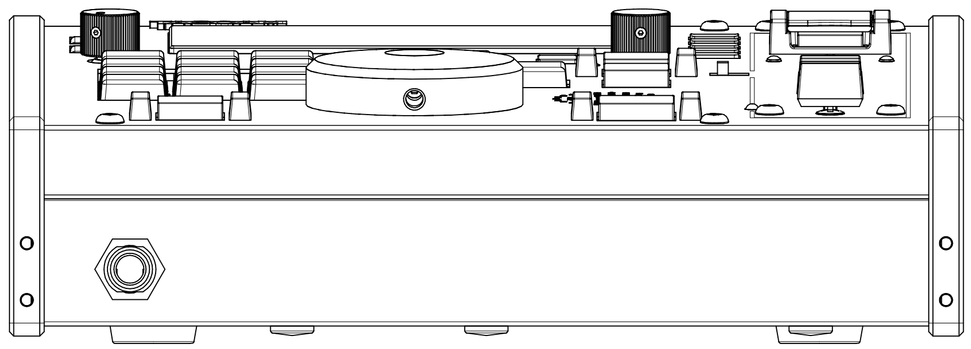

DATE: 2012/10/25 TIME: 17:57:50 DIRECTORY: N:¥cad33¥KPS$¥MODEL¥KOSATOK DRAWING¥ RC9X_2D_MAE_RC-9010_S_A1__MAE_MT