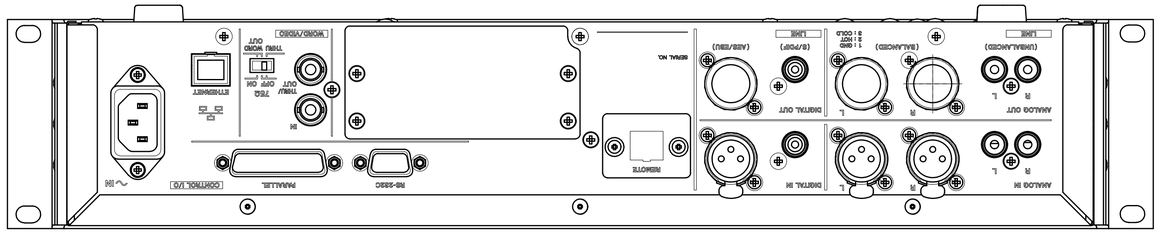
AC IN
CONTROL I/O
PARALLEL
RS-232C
REMOTE
SERIAL NO.
ANALOG IN
DIGITAL IN
DIGITAL OUT
ANALOG OUT
(AES/EBU)
(S/PDIF)
(BALANCED)
(UNBALANCED)
LINE
LINE
1 : GND
2 : HOT
3 : COLD
L
R
L
R
L
R
L
R
WORD/VIDEO
TRIGGER
OUT
TRIGGER WORD
OUT
OFF ON
7EA
TRIGGER
IN
ETHERNET

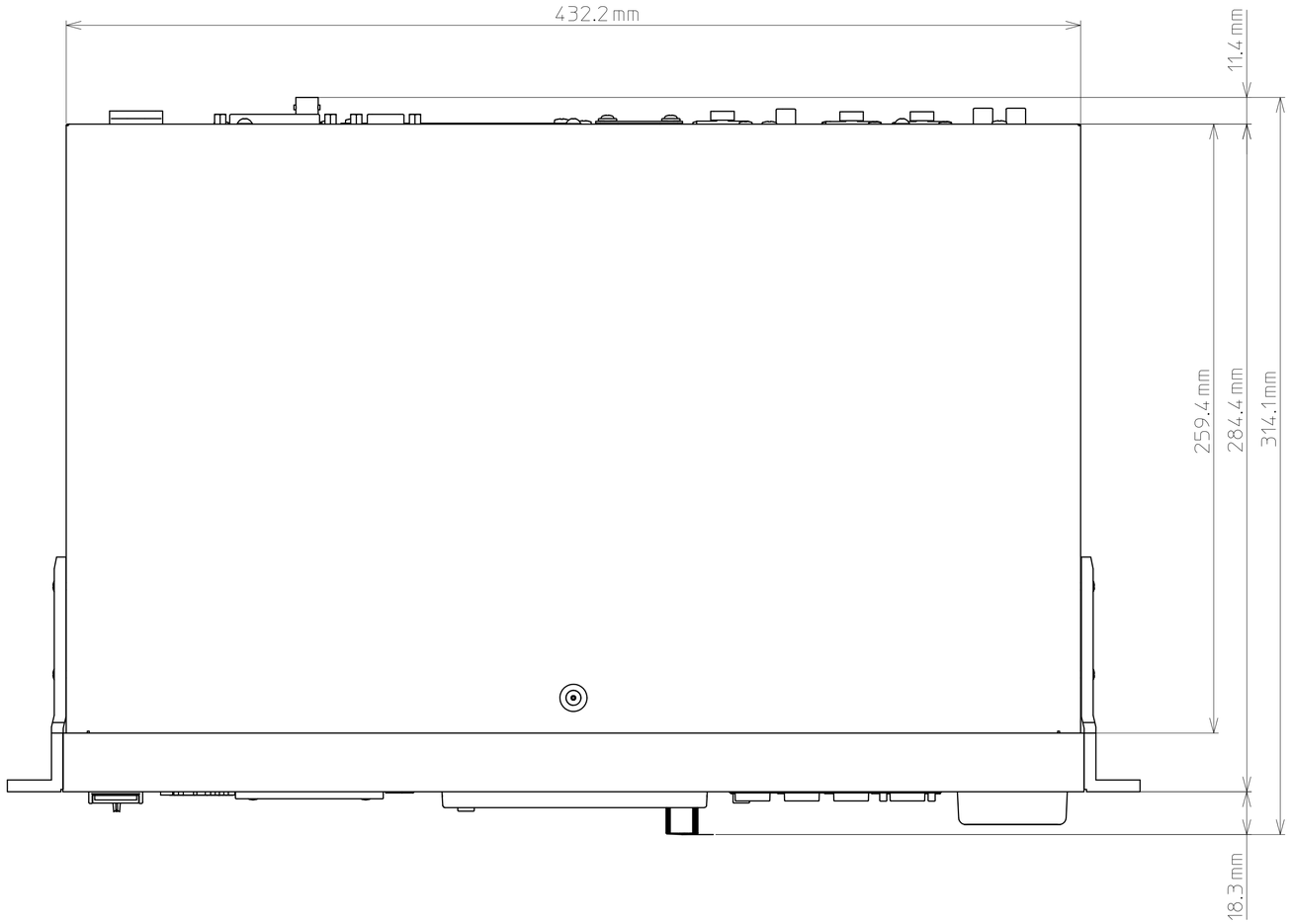
432.2 mm
11.4 mm
259.4 mm
284.4 mm
314.1mm
18.3 mm

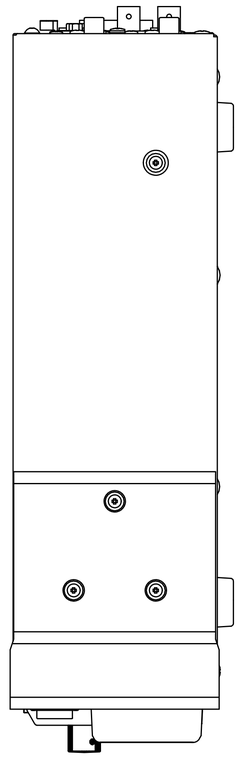

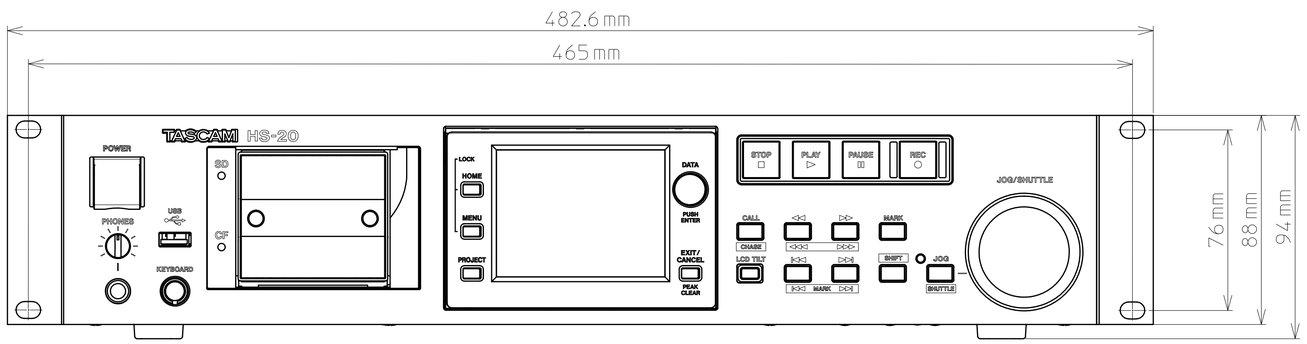
482.6 mm
465 mm
76 mm
88 mm
94 mm
TASCAM HS-20
POWER
PHONES
USB
KEYBOARD
SD
CF
LOCK
HOME
MENU
PROJECT
DATA
PUSH ENTER
EXIT/ CANCEL
REAL CLEAR
STOP
PLAY
PAUSE
REC
JOG/SHUTTLE
CALL
CHASE
MARK
LCD TILT
SHIFT
JOG
SHUTTLE